KOLIBRI

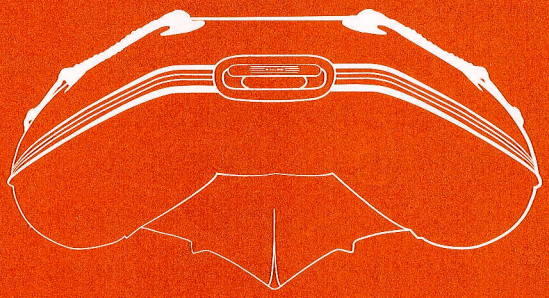

Owner's manual
Inflatable boats

Rigid & Inflatable Boats

Bootman.nl

Kolibri LLC offers wide choice of inflatable boats. «Kolibri» inflatable boats are a combination of high quality materials and high qualified specialists. Its advantages are: compactness, small weight, flexibility and durability, transportability, well nautical properties, high speed, big functioning. Boat hull is divided into numbers of separate chambers what provides increased safety on the water. The manual will help you to use your boat safely and happy. There is detailed information about a boat, its standard and additional complete set and technical maintenance. Read carefully the manual before operating a boat.

Bootman.nl

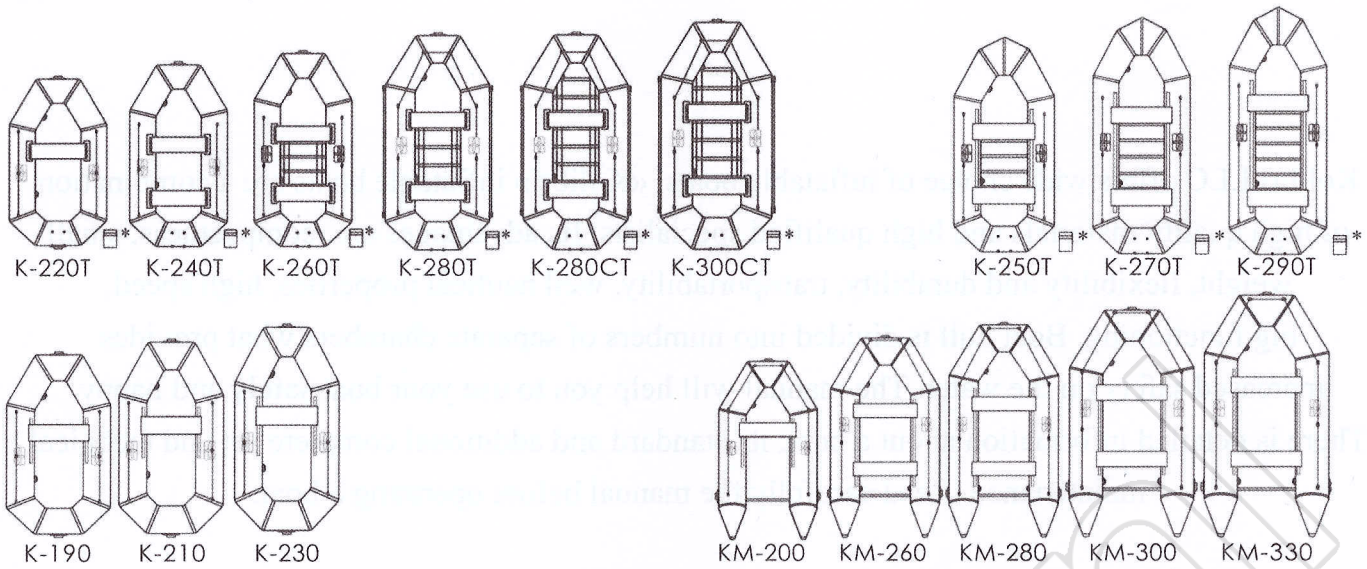

NOTICE. The is a fastening for a dismountable transom for K-220T, K-240T, K-260T, K-280T, K-280CT, K-300CT, K-250T, K-270T, K-290T boats. Transom can be bought separately.* - dismountable transom.
There is a bilge flooring for KM-200, KM-260, KM-280, KM-300, KM-330 boats which can be bought separately.

Bootman.ru

Customer!

Thank you for your choice. You are the owner of «Kolibri» boat. It is small and walking class of boat, produced for the rest on water, fishing and hunting.

1.TECHNICAL CHRACTERISTICS

Description	Rowing boats												Motor boats				
Model	K-190	K-210	K-230	K-220T	K-240T	K-260T	K-280T	K-280CT	K-300CT	K-250T	K-270T	K-290T	KM-200	KM-260	KM-280	KM-300	KM-3
Boat size, cm	190x105	210x105	230x105	220x130	240x130	260x130	280x130	280x140	300x140	248x130	270x130	290x130	200x140	260x140	280x148	300x160	330x1
Cockpit size, cm	134x49	154x49	174x49	152x62	172x62	192x62	212x62	204x64	224x64	173x62	195x62	215x62	110x64	167x64	190x70	202x76	233x
Balloon diameter, cm	28	28	28	34	34	34	34	38	38	34	34	34	38	38	39	42	42
Q-ty of chambers, pieces	2	2	2	2	2	2	2	2	2	2	2	2	2	3	3	3	3
Carrying capacity, kg	100	110	120	160	216	220	250	238	340	212	241	260	250	265	351	400	480
Passengers capacity, persons	1	1	1	1	2	2	2	2	3	2	2	2	1	2	2	3	4
Engine power, H.P.	-	-	-	2,5	2,5	3,5	3	3,5	3,5	3,5	3,5	3	3,5	5	5	8	12
Compete set weight, kg	12	12,5	13	13,5	15,5	20	21	28	30	20	22	22,5	25	33	36	41	43
Packing sizes, cm	74x35x30	74x35x30	74x35x30	75x45x30	85x45x30	100x47x33	100x47x33	100x53x33	100x53x33	100x47x33	100x47x33	100x47x33	100x53x33	100x53x33	100x53x33	100x57x40	110x65
CE	-	-	-	D	D	C	C	C	C	D	C	C	D	D	C	C	C

NOTICE. The is a fastening for dismountable transom for K-220T, K-240T, K-260T, K-280T, K-280CT, K-300CT, K-250T, K-270T, K-290T boats.Transom can be bought separately.

There is bilge flooring for KM-200, KM-260, KM-280, KM-300, KM-330 boats which can be bought separately.

Bootman.ru

II . COMPIETE SET

Model, pc.	K-190	K-210	K-230	K-220T(L)	K-240T(L)	K-260T(L)	K-280T(L)	K-280CT(L)	K-300CT(L)	K-250T(L)	K-270T(L)	K-290T(L)	KM-200	KM-260	KM-280	KM-300	KM-330
Inflatable boat	1	1	1	1	1	1	1	1	1	1	1	1	1	1	1	1	1
Hard seat	1	1	1	1	2	2	2	2	2	2	2	2	2	2	2	2	2
Bilge flooring (set)*	1	1	1	1	1	1	1	1	1	1	1	1	1	1	1	1	1
Foot pump**	1	1	1	1	1	1	1	1	1	1	1	1	1	1	1	1	1
Oar	2	2	2	2	2	2	2	2	2	2	2	2	2	2	2	2	2
Repair set	1	1	1	1	1	1	1	1	1	1	1	1	1	1	1	1	1
Manual	1	1	1	1	1	1	1	1	1	1	1	1	1	1	1	1	1
Bag for packing	1	1	1	1	1	1	1	1	1	1	1	1	1	1	1	1	1
Bag for sole packing***	–	–	–	*	*	*	*	*	*	*	*	*	*	*	*	1	1
Hinged transom****	–	–	–	*	*	*	*	*	*	*	*	*	–	–	–	–	–
Safety vest*****	–	–	–	*	*	*	*	*	*	*	*	*	*	*	*	*	*
Tent*****	–	–	–	*	*	*	*	*	*	*	*	*	*	*	*	*	*
Soft cover for thwart (with a bag and without it)*****	–	–	–	*	*	*	*	*	*	*	*	*	*	*	*	*	*

Note in the paragraph VIII

Bootman.nl

III. STRUCTURE (CONSTRUCTION).

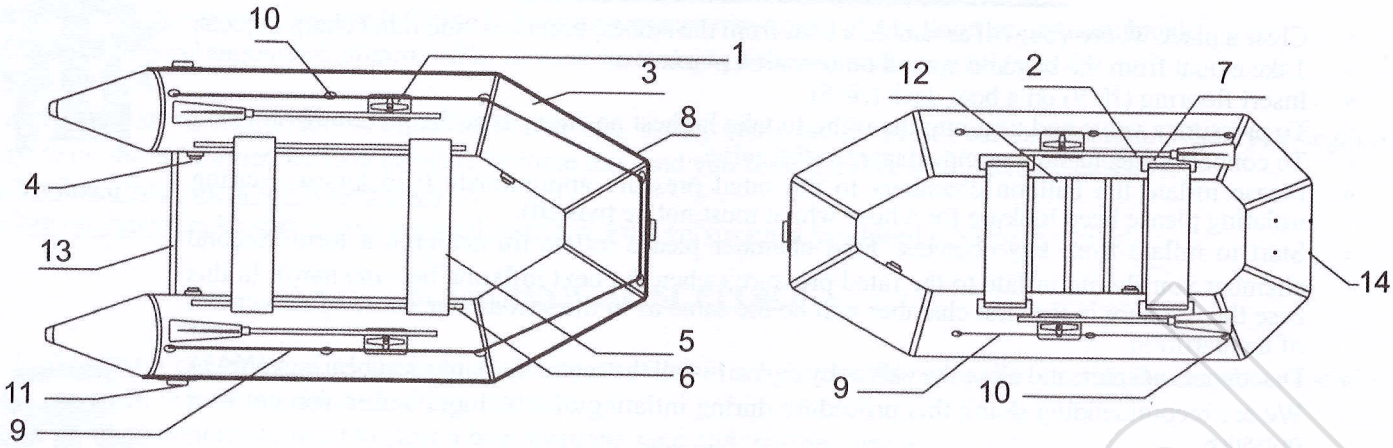

1 – rowlocks; 2 – an oar; 3 – inflatable balloon with the hermetic partition; 4 – a valve; 5 – thwart; 6 – holder for the removable seat; 7 – seats bracket; 8 – rubbing strake; 9 – lifeline; 10 – lifeline holder; 11 – holders; 12 – floorboards; 13 – transom for the engine installation; 14 – dismountable transom fastenings (K-220T, K-240T, K-260T, K-280T, K-280CT, K-300CT, K-250T, K-270T, K-290T).

Bootman.nl

IV. PREPARATION TO EXPIOITATION.

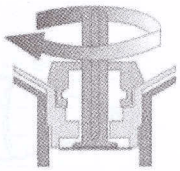

picture 1

- Clear a place where you will assemble a boat from the stones, branches, and other sharp objects.
- Take a boat from the bag and spread on prepared place.
- Insert flooring (№ 9) on a boat deck (№ 5).
- To pressure a valve and turn into the right, to take highest position, as at the picture № 1.
- To connect a mechanical pump adapter to the valve.
- Please inflate the balloon chambers to the rated pressure approximate 0.15 kg\см² (during inflating please keep looking for a hose which must not be twisted).
- Start to inflate from any chamber. First chamber please inflate till acquired a form. Second chamber you should inflate to the rated pressure (when the next inflating become hard). In this case the pressure in the first chamber will be the same as in the second one cause of movement of the partition.
- Disconnect adapter, and close the valves by corks. Install the seats (№ 4) into seat bearings (№11). We are recommending doing this procedure during inflating of a balloon, before you got max pressure.
- Put the oars in the rowlocks (№ 1).

If you need to install a dismountable transom (for K-220T, K-240T, K-260T, K-280T, K-280CT, K-300CT, K-250T,K-270T, K-290T models) it is better to do this before you got the rated pressure.

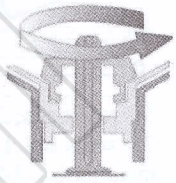

picture 2

Deflate the air from hermetic chambers after operation, you have to turn off a valve plug, press a valve and turn it into the left side, it must purchase the lowest position (picture № 2).

Bootman.nl

WARNING: * During inflating a boat do not use equipment which forms compressed air. (air automatic compressor for tire inflating). Surplus pressure may cause of a balloon or partition break.
* *During outboard engine installation make sure the fastenings of the transom are well fixed.*

ATTENTION!

If a pressure at the board slots is more than rated one, it may cause less term of boat exploitation. When you begin to operate on the cold water, balloon pressure become less, and you should inflate it to the rated pressure.

Bad inflated boat operation is forbidden!

Before operation make sure valves are well installed. Inlet valves must be closed reliable by corks!

V. TECHNICAL SUPPORT

1. The main condition of a long term operation of a boat – is right conditions of its contain. Do not allow too high pressure in balloons during heating in the sun.
2. After operation you need to clear a boat from the sand and mud and dry it.
3. Water should not fall into the balloon. If there were some of oil or gas spots please wash that place with soapy water.
4. After season's end, boat should be prepared to the winter storing. Clean surface form the sand and mud and dry well.
5. If there is a damage you should make a repair. If it is possible best condition of boat storage is in a dry place.

Bootman.nl

6. Small repair (puncture, cut) you can make yourself, by using repair set. We do not recommend to do some difficult repairs, as balloon damage, partition and seams. In this case you need to consult with our representative in your region.

VI. REQUIREMENTS FOR SAFETY

1. It is strictly prohibited to operate a boat being drunk or under the influence.
2. It is strictly prohibited to operate a boat without individual rescue equipment (safety vest, belts, rescue circle).
3. It is strictly prohibited to operate a boat in the afternoon.
4. If you have an outboard engine, it is strictly prohibited to approach to the swimmers. Do not allow swimmers to swim near the stern of your boat until it moves.

IT IS PROHIBITED!!!

- To use auto compressor (source of compressed air) for boat inflating;
- To load more than it is allowed;
- To use an outboard engine with a capacity that exceeds the allowable;
- To operate a boat when the wave height is more than appointed at the small boat additional Certificate;
- To not allow the pressure in balloon became more than 0.2 kg/cm²;
- To carry a boat on a hard surface (asphalt, stones, broken glass etc.);

Bootman.nl

RECOMMENDATIONS.

- Before operation, please check all additional and standard equipment including oars, pump, safety vests, are in a boat.
- Weight should be evenly distributed along the length of a boat. Max loaded weight and installed engine may cause a problem in operating. It is recommended to inform somebody about time and place of departure, course and a time of possible return.
- If you are planning a long time course you should take flashlight, medicine chest, anchor, safety leash.
- Be careful with winds and streams for reaching the shore.
- If you damaged one chamber you need to displace the weight on the opposite side. Tried to fix damaged chamber (tied it or hold in a lifting position).
- Each boat must be registered at the Register of Ukraine. Please follow all Register rules.

VII. WARRANTY MAINTENANCE.

I. Warranty is valid after date of sale and stamp of a dealer will be writing down.
Below are warranty accidents:

Bootman.nl

a: warranty maintenance for fabric is 3 years in case of cracks, porosity, rotting.
b: Hull seams are also warranty maintenance in the case of exfoliation

NOTICE. Seams are exfoliated when outside layer separated from tissue base or seams lost its structure strength. **boat is qualitative if volume is 80 % in the inflated condition for 12 hours**.
C: Boat using in commercial purposes means – 1 year of warranty.
d: 12 month warranty for all other boat components including valves, rowlocks, oars, pump, packing bag, tow coils, parts of flooring and seats to all boat models.

II. If this warranty is spread only on fabric wastes or quality of work, it means it is not concern of simple deterioration, attrition or damages, caused:

1) carelessness; technical support lack; accidents and wrong boat operation;
2) additional equipment or component usage, made or sale not by us;
3) component replacement or removal.

Bootman.nl

III. Accident value or its consequences or costs of such accidents as towing, launching, on a tow transport and storage, on a telephone or some rent boat, inconveniences, time wasting or losses in case of any damage.

IV. The Buyer should provide access to the product for warranty maintenance, bring it to the authorized dealer, who will make a repair of this product. Inspection and repair will be provided if this kind of accident is included into warranty maintenance. All expenditures will be paid by the Buyer if the repair is not included into warranty maintenance.

Every product or part of product which is giving for examine should be washed and dried.

V. Our responsibilities, provided by this warranty will be limited to repair or replace the defective part of product that are necessary for deficiencies correction, which have been appeared in a consequence of waste fabric or working quality, as appointed in the warranty maintenance.

We reserve the right to change product structure, do not taking responsibility to modify previously manufactured product.

Boat is manufactured according to ISO/CD6185 TU U 25.1-23850681-001-2003, under the Register of navigation of Ukraine supervision.

Register of navigation of Ukraine Certificate number is ССП 221-3-233-08.

Bootman.nl

WARRANTY COUPON.

Owner: _____ **Model** _____

Last name, first name, patronymic

Address: _____ **Ordinal numeral** _____

Year of manufacture _____

Date of sale _____

Dealer stamp

Acquainted with the manual and warranty obligations.

Owner's signature _____

Warranty repair № 1 _____

_____

Warranty repair № 2 _____

Bootman.nl

VIII. NOTE

The rubbing strake includes into a set of the rowing boats if there appointed letter (L) in the boat model, in motor–rowing boats there is an obligatory element of a design.

* Models K-190 – K-230 equipped by the sole-carpet only after confirmation with the Buyer.

Set for models K-220T - KM-330 – includes one of the sole-carpet, sole-book, air-deck (inflatable flooring), entire plywood or aluminum sole.

** Boat models with the air-deck equipped with an additional high-pressure pump.

*** Boat models with the sole-book, air-deck, entire plywood or aluminum sole equipped by additional bag for packing.

**** On the boat models K-220T (L) – K-300CT (L) installed hinged transom mounting, which can be purchased separately as an accessory.

***** By agreement with the customer boat can be equipped with: safety vests in the number of seats in appropriate packaging, soft cover for thwart or soft cover with a bag by the number of no more than the number of the hard seats, one tent. Equipment by accessories shall be agreed in writing accompaniment.

Bootman.nl

Rigid & Inflatable Boats

KOLIBRI

MODEL (модель)

к-с (s-c) ☐ к-к (c-b) ☐ a-d ☑

GREEN (зел.) ☑ CAM (камуфл.) ☐ GREY (сер.) ☐ COLOR (цвет) ☐

HIN (номер) UA-KLB **91862E509**

NET WEIGHT (нетто) **42,00 кг** GROSS WEIGHT (брутто) **45,00 кг**

CONSIGNEE (грузополучатель) **HOLLAND**

22 UA-KLB KM300 91862E509R

KOLIBRI

KOLIBRI Boat manufacturing

a. 4, Matlakhova str.
Dnipropetrovsk, Ukraine
t. +38 (056) 375·37·76
f. +38 (056) 375·37·79

g. 48°28'19.06''N 38°58'55.02''
e. info@kolibriboats.com
w. kolibriboats.com